4-CHANNEL RELAY BOARD-2

4-Channel Relay Board-2 is a simple and convenient way to interface 4 relays for switching application in your project.

- Input supply 12 VDC @ 170 mA
- Output four SPDT Relay
- Relay specification 5 A @ 230 VAC
- Trigger level 2 ~ 5 VDC
- Box Header (IDC) connector for connection of trigger signal
- LED on each channel indicates relay status
- Power-On LED indicator
- Screw terminal connector for easy relay output and power in connection
- Four mounting holes of 3.2 mm each
- PCB dimensions 56 mm x 83 mm

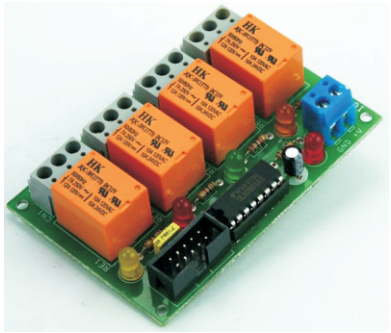

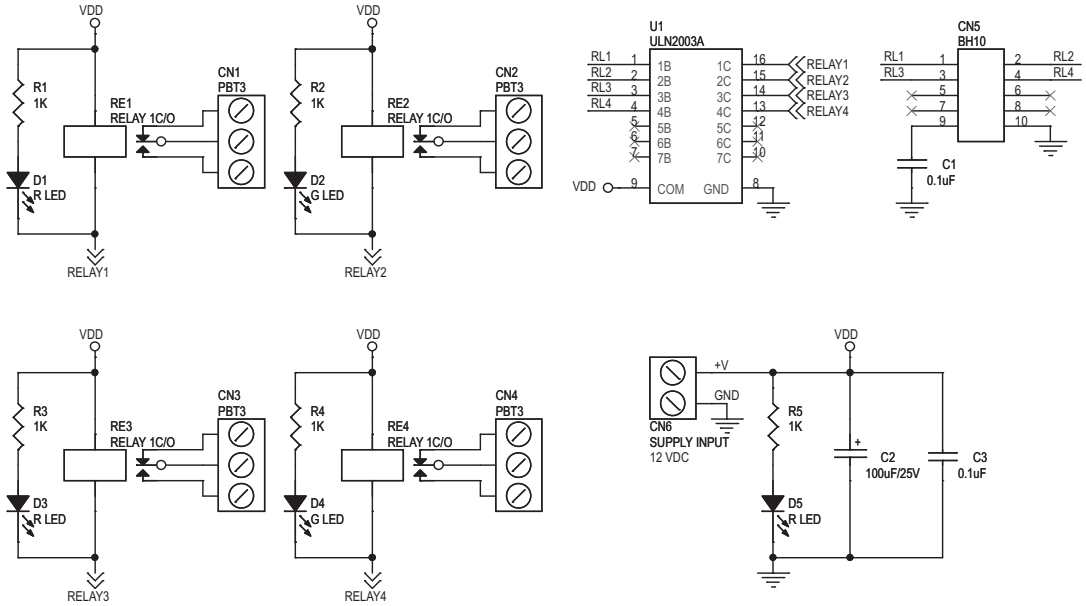

SR.	QTY.	REF.	DESCRIPTION
1	4	CN1,CN2,CN3,CN4	3 PIN SCREW TERMINAL CONNECTOR
2	1	CN5	10 PIN BOX HEADER CONNECTOR
3	1	CN6	2 PIN SCREW TERMINAL CONNECTOR
4	2	C1,C3	0.1uF
5	1	C2	100uF/25V
6	3	D1,D3,D5	RED LED
7	2	D2,D4	GREEN LED
8	4	RE1,RE2,RE3,RE4	12V RELAY
9	5	R1,R2,R3,R4,R5	1K
10	1	U1	ULN2003A
11	1	SOCKET	16 PIN DIP IC SOCKET

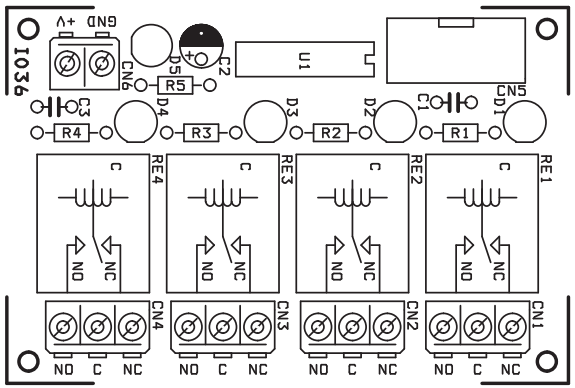

twovolt INDIA Copyright © 2005

4-CHANNEL RELAY BOARD-2

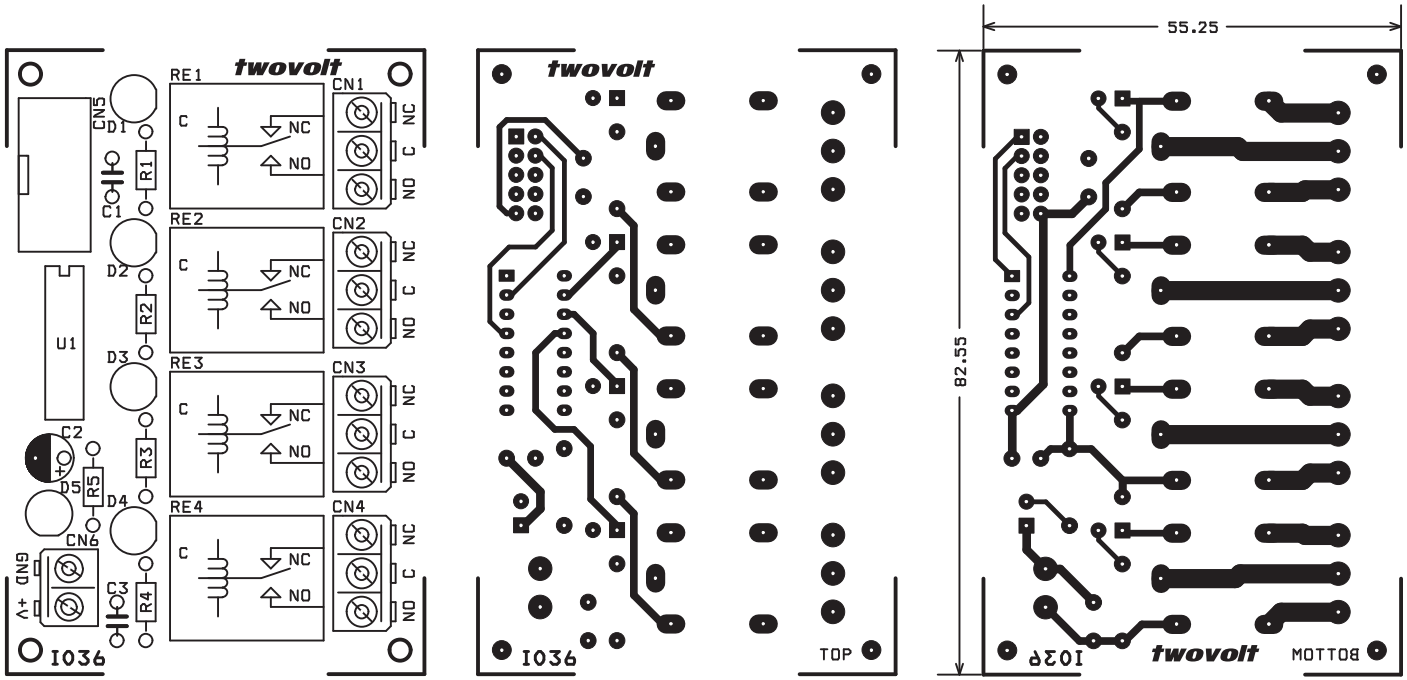

07005
twovolt INDIA Copyright © 2005