AUDIO SIGNAL TO LIGHT UNIT

Audio Signal to Light project is an audio to light modulator, which controls the intensity of light in response to an audio input.
This kit is ideal for dance parties, DJ, Discotheques etc.

- Input : Audio signal input
- AC Mains Power supply : 230 VAC or 110 VAC
- Load : 200 W
- Input isolated with the use of Opto-coupler
- Onboard Presets to adjust level
- Terminal pins for connecting audio input
- Four mounting holes of 3.2 mm each
- PCB dimensions 36 mm x 50 mm

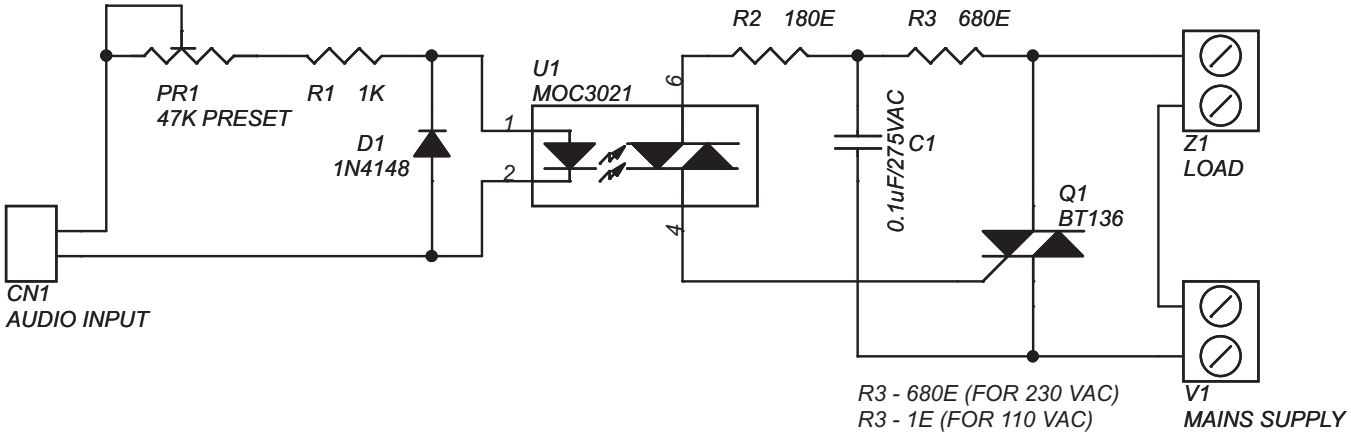

CN1 Connector : Audio Signal Input
Z1 Connector : Load
V1 Connector : Mains Power Supply

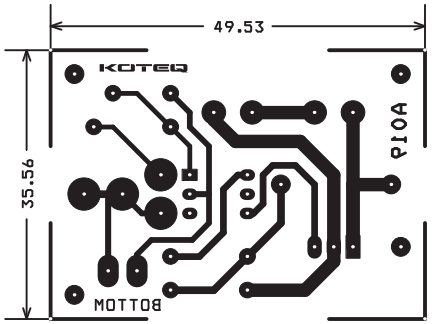

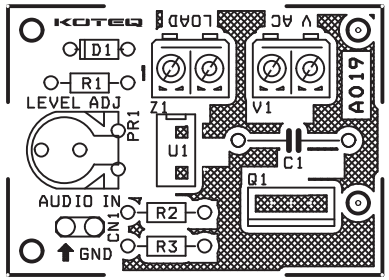

SR.	QTY.	REF.	DESCRIPTION
1	1	CN1	2 PCB PIN
2	1	C1	0.1uF/275VAC
3	1	D1	1N4148
4	1	PR1	47K/50K PRESET
5	1	Q1	BT136
6	1	R1	1K
7	1	R2	180E
8	1	R3	680E/1E
9	1	U1	MOC3021
10	1	V1	2 PIN PBT CONNECTOR
11	1	Z1	2 PIN PBT CONNECTOR

twovolt INDIA Copyright © 2005