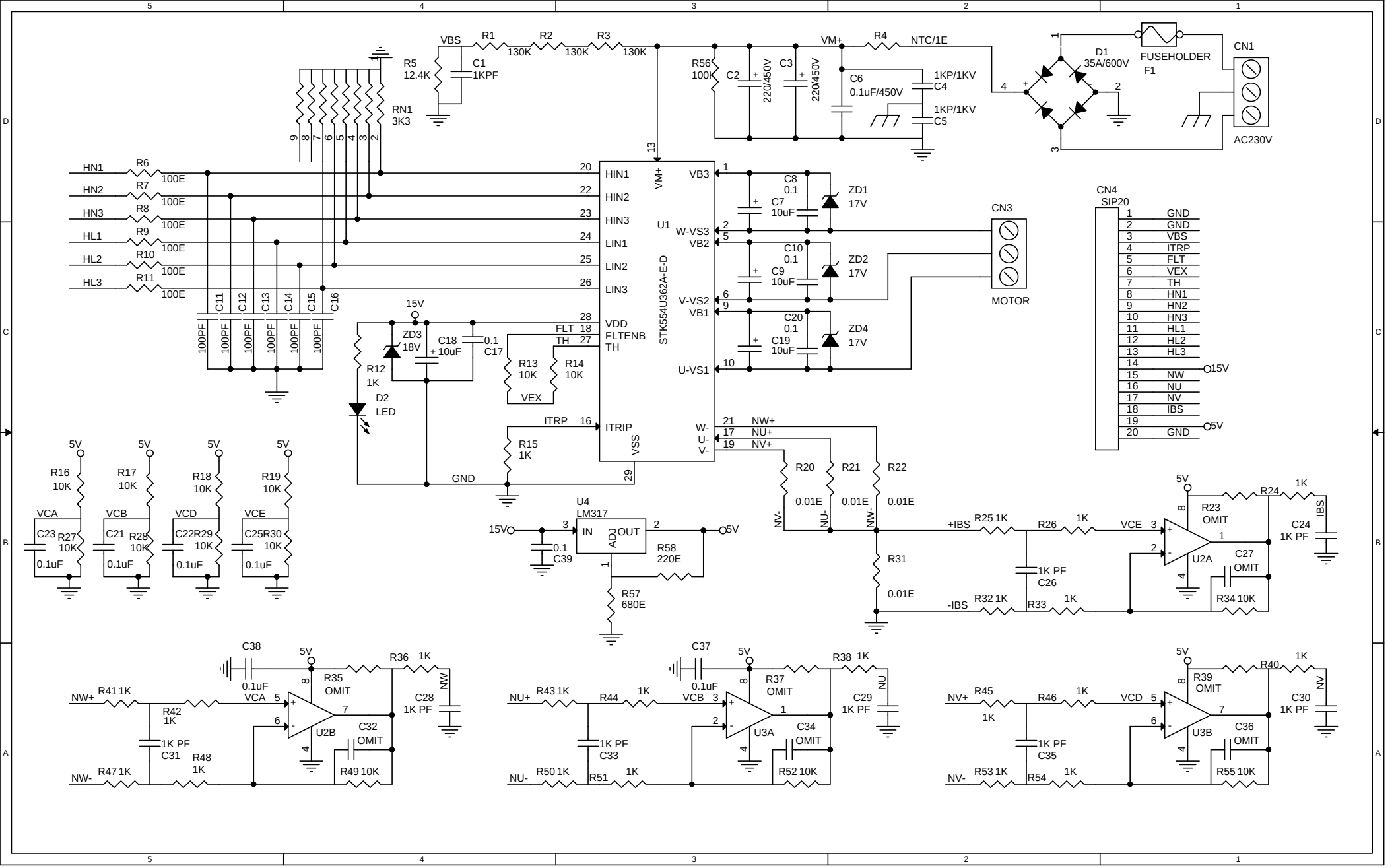
VBS
R1 130K
R2 130K
R3 130K
R5 12.4K
C1 1KPF
RN1 3K3
R56 100K
C2 220/450V
C3 220/450V
VM+
R4 NTC/1E
C6 0.1uF/450V
1KP/1KV C4
1KP/1KV C5
D1 35A/600V
FUSEHOLDER F1
CN1
AC230V
HN1 R6 100E
HN2 R7 100E
HN3 R8 100E
HL1 R9 100E
HL2 R10 100E
HL3 R11 100E
C11 100PF
C12 100PF
C13 100PF
C14 100PF
C15 100PF
C16 100PF
HIN1
HIN2
HIN3
LIN1
LIN2
LIN3
VDD
FLTENB
TH
ITRIP
VSS
VB3
W-VS3
VB2
V-VS2
VB1
U-VS1
W-
U-
V-
U1
STK554U362A-E-D
C8 0.1
C7 10uF
ZD1 17V
C10 0.1
C9 10uF
ZD2 17V
C20 0.1
C19 10uF
ZD4 17V
CN3
MOTOR
CN4 SIP20
1 GND
2 GND
3 VBS
4 ITRP
5 FLT
6 VEX
7 TH
8 HN1
9 HN2
10 HN3
11 HL1
12 HL2
13 HL3
14
15 NW
16 NU
17 NV
18 IBS
19
20 GND
15V
5V
ZD3 18V
C18 10uF
C17 0.1
R12 1K
D2 LED
R13 10K
R14 10K
VEX
FLT
TH
ITRP
R15 1K
GND
NW+
NU+
NV+
R20 0.01E
R21 0.01E
R22 0.01E
NV-
NU-
NW-
R31 0.01E
R16 10K
R17 10K
R18 10K
R19 10K
VCA
VCB
VCD
VCE
C23 0.1uF
C21 0.1uF
C22 0.1uF
C25 0.1uF
R27 10K
R28 10K
R29 10K
R30 10K
U4 LM317
IN
ADJ
OUT
C39 0.1
R58 220E
R57 680E
+IBS
-IBS
R25 1K
R26 1K
R32 1K
R33 1K
1K PF C26
R23 OMIT
R24 1K
C24 1K PF
C27 OMIT
R34 10K
U2A
C38 0.1uF
R35 OMIT
R36 1K
NW
C28 1K PF
NW+ R41 1K
R42 1K
1K PF C31
R48 1K
NW- R47 1K
U2B
C32 OMIT
R49 10K
C37 0.1uF
R37 OMIT
R38 1K
NU
C29 1K PF
NU+ R43 1K
R44 1K
1K PF C33
NU- R50 1K
R51 1K
U3A
C34 OMIT
R52 10K
R39 OMIT
R40 1K
NV
C30 1K PF
NV+ R45 1K
R46 1K
1K PF C35
NV- R53 1K
R54 1K
U3B
C36 OMIT
R55 10K