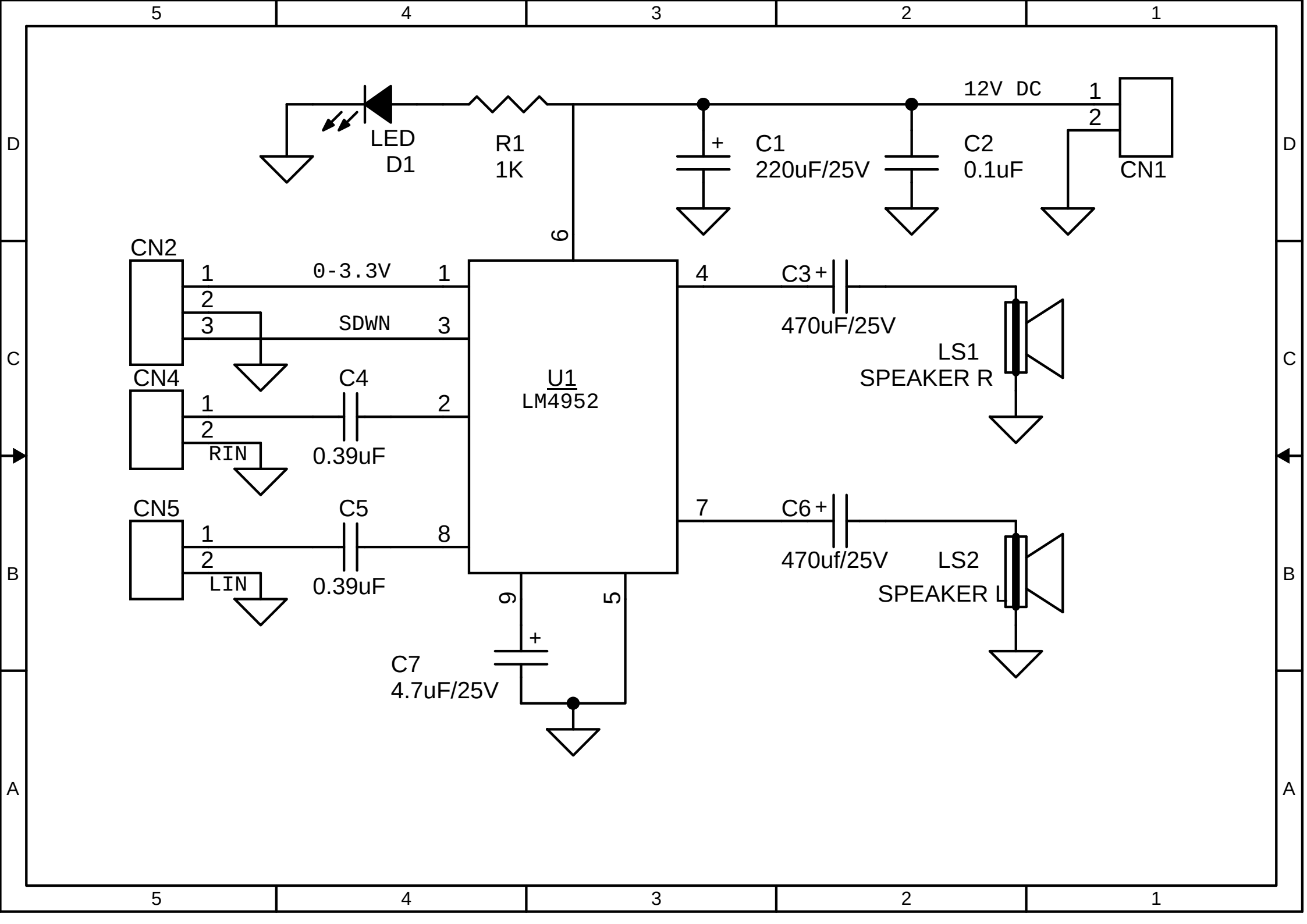
LED
D1
R1
1K
C1
220uF/25V
C2
0.1uF
12V DC
CN1
CN2
0-3.3V
SDWN
CN4
C4
0.39uF
RIN
CN5
C5
0.39uF
LIN
U1
LM4952
C3
470uF/25V
LS1
SPEAKER R
C6
470uf/25V
LS2
SPEAKER L
C7
4.7uF/25V