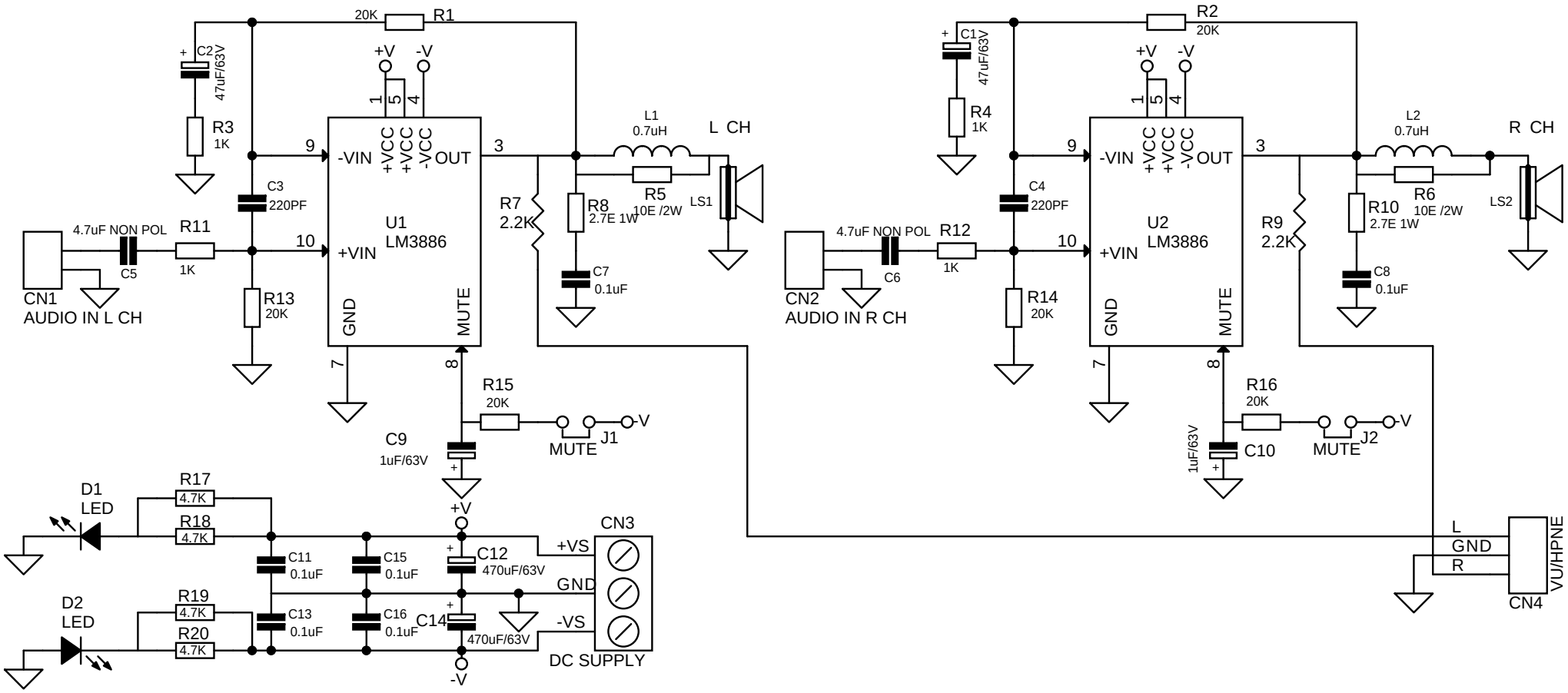
20K
R1
+V
-V
C2
47uF/63V
R3
1K
9
-VIN
+VCC
+VCC
-VCC
OUT
3
U1
LM3886
+VIN
10
GND
MUTE
7
8
C3
220PF
4.7uF NON POL
R11
1K
C5
CN1
AUDIO IN L CH
R13
20K
R7
2.2K
R8
2.7E 1W
L1
0.7uH
R5
10E /2W
L CH
LS1
C7
0.1uF
R15
20K
C9
1uF/63V
MUTE
J1
-V
D1
LED
R17
4.7K
R18
4.7K
D2
LED
R19
4.7K
R20
4.7K
C11
0.1uF
C13
0.1uF
C15
0.1uF
C16
0.1uF
C12
470uF/63V
C14
470uF/63V
+V
-V
+VS
GND
-VS
CN3
DC SUPPLY
C1
47uF/63V
R4
1K
R2
20K
C4
220PF
4.7uF NON POL
R12
1K
C6
CN2
AUDIO IN R CH
R14
20K
R9
2.2K
R10
2.7E 1W
L2
0.7uH
R6
10E /2W
R CH
LS2
C8
0.1uF
R16
20K
1uF/63V
C10
MUTE
J2
L
GND
R
CN4
VU/HPNE