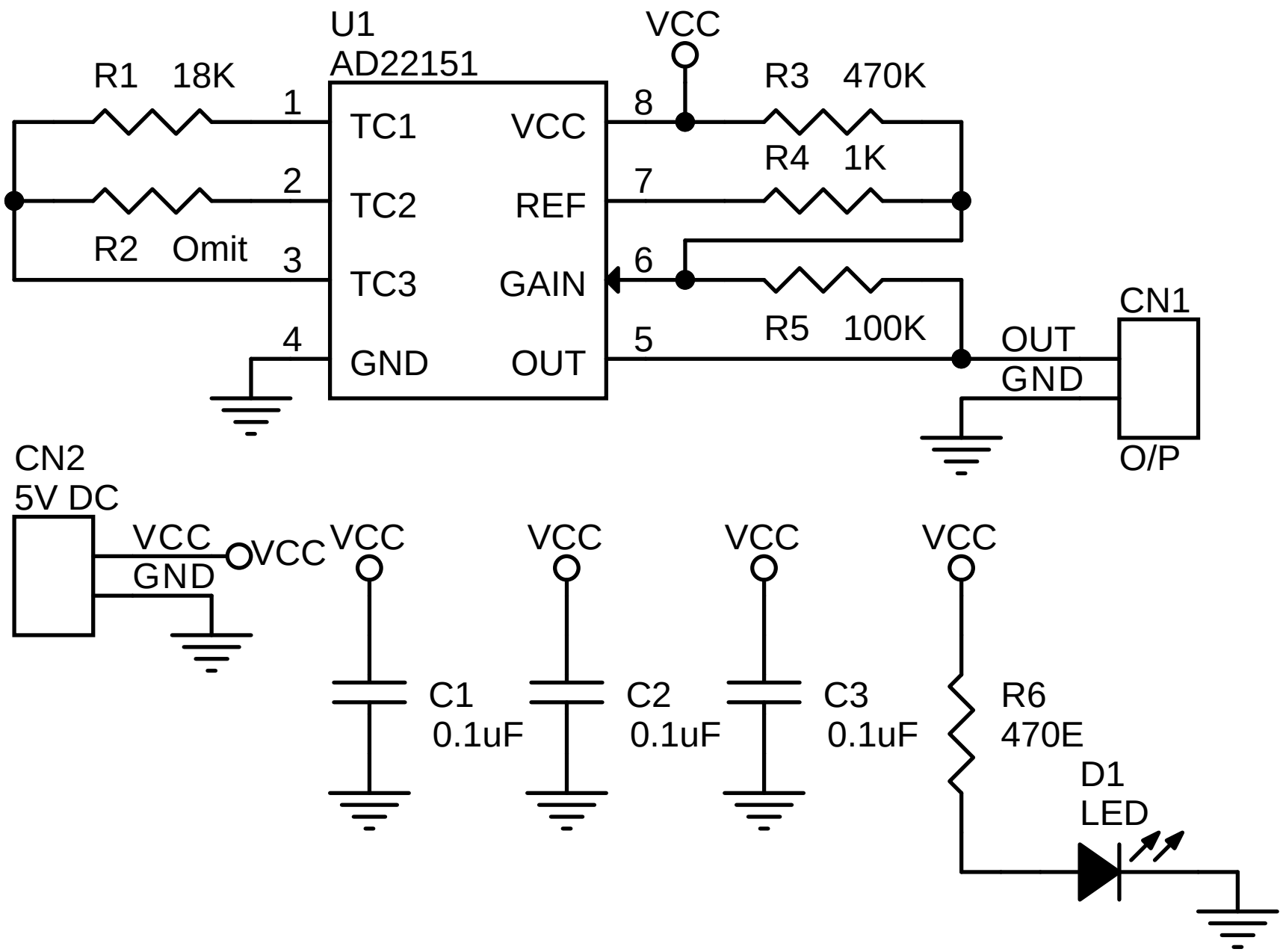
U1
AD22151
R1 18K
R2 Omit
1
2
3
4
TC1
TC2
TC3
GND
VCC
REF
GAIN
OUT
8
7
6
5
VCC
R3 470K
R4 1K
R5 100K
OUT
GND
CN1
O/P
CN2
5V DC
VCC
GND
VCC
VCC
VCC
VCC
VCC
C1
0.1uF
C2
0.1uF
C3
0.1uF
R6
470E
D1
LED