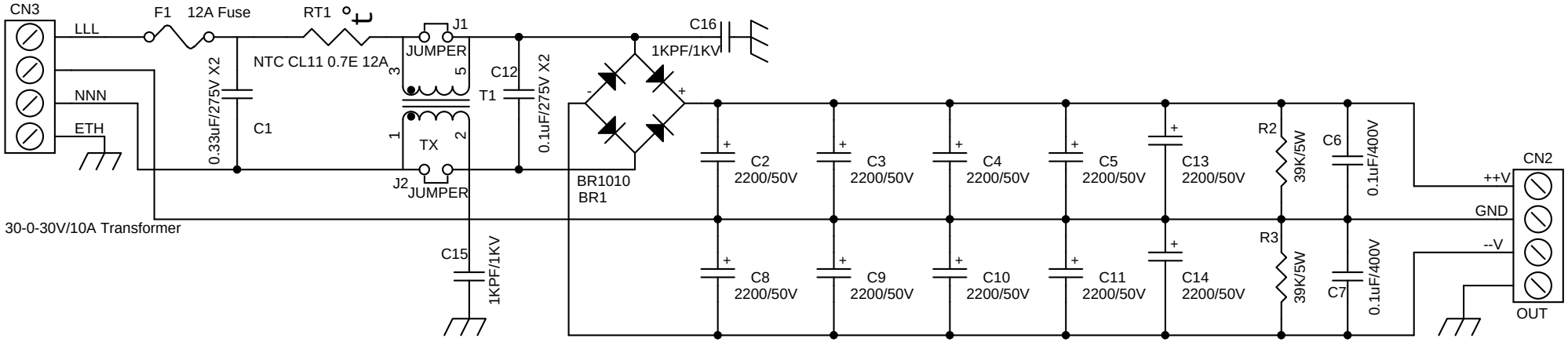
CN3
LLL
NNN
ETH
F1
12A Fuse
RT1
NTC CL11 0.7E 12A
0.33uF/275V X2
C1
J1
JUMPER
3
5
1
2
TX
J2
JUMPER
T1
C12
0.1uF/275V X2
C16
1KPF/1KV
BR1010
BR1
C15
1KPF/1KV
30-0-30V/10A Transformer
C2
2200/50V
C3
2200/50V
C4
2200/50V
C5
2200/50V
C13
2200/50V
C8
2200/50V
C9
2200/50V
C10
2200/50V
C11
2200/50V
C14
2200/50V
R2
39K/5W
R3
39K/5W
C6
0.1uF/400V
C7
0.1uF/400V
CN2
++V
GND
--V
OUT

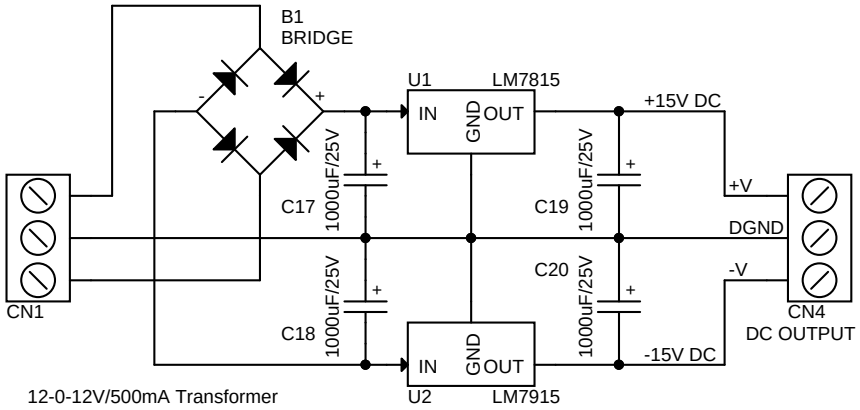
B1
BRIDGE
U1
LM7815
IN
GND
OUT
+15V DC
C17
1000uF/25V
C19
1000uF/25V
+V
DGND
-V
C20
1000uF/25V
C18
1000uF/25V
-15V DC
CN1
CN4
DC OUTPUT
12-0-12V/500mA Transformer
U2
LM7915