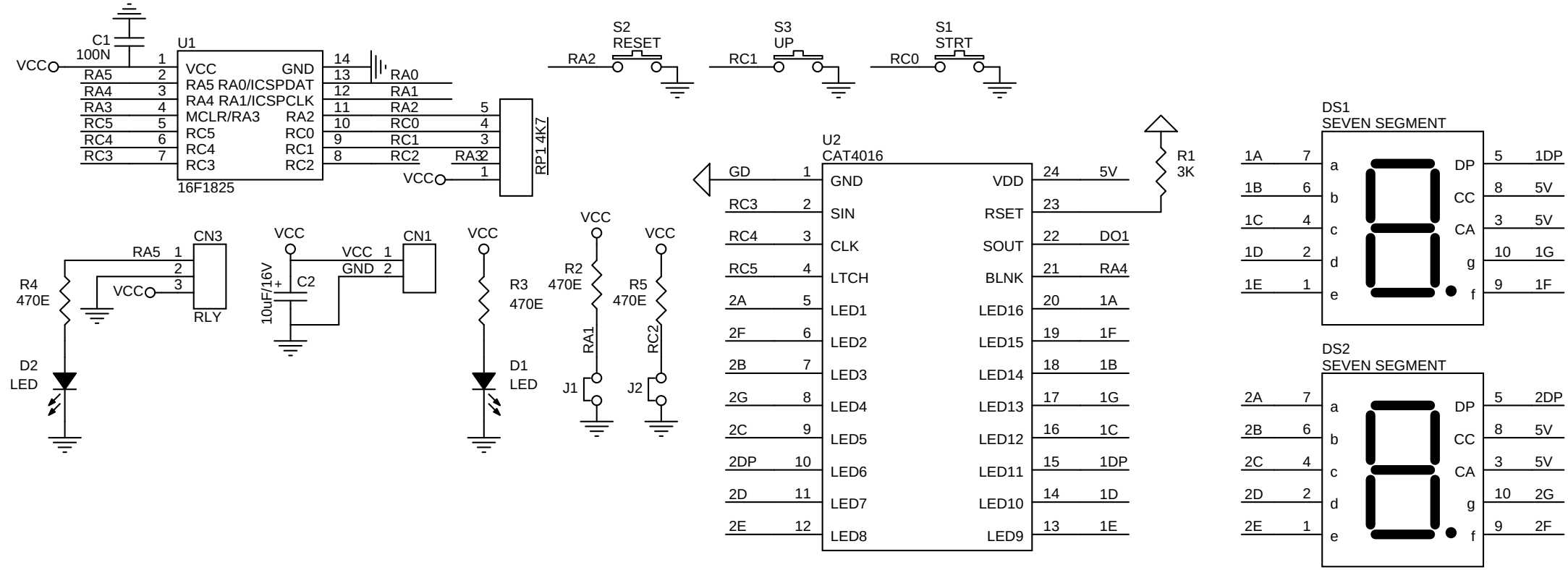
C1
100N
VCC
U1
VCC
RA5
RA4
RA3
RC5
RC4
RC3
VCC
RA5 RA0/ICSPDAT
RA4 RA1/ICSPCLK
MCLR/RA3
RC5
RC4
RC3
GND
RA2
RC0
RC1
RC2
RA0
RA1
RA2
RC0
RC1
RC2
RA3
VCC
16F1825
RP1 4K7
S2
RESET
RA2
S3
UP
RC1
S1
STRT
RC0
U2
CAT4016
GD
RC3
RC4
RC5
2A
2F
2B
2G
2C
2DP
2D
2E
GND
SIN
CLK
LTCH
LED1
LED2
LED3
LED4
LED5
LED6
LED7
LED8
VDD
RSET
SOUT
BLNK
LED16
LED15
LED14
LED13
LED12
LED11
LED10
LED9
5V
DO1
RA4
1A
1F
1B
1G
1C
1DP
1D
1E
R1
3K
DS1
SEVEN SEGMENT
1A
1B
1C
1D
1E
a
b
c
d
e
DP
CC
CA
g
f
1DP
5V
5V
1G
1F
DS2
SEVEN SEGMENT
2A
2B
2C
2D
2E
2DP
5V
5V
2G
2F
CN3
RA5
VCC
RLY
R4
470E
D2
LED
VCC
CN1
VCC
GND
C2
10uF/16V
VCC
R3
470E
D1
LED
VCC
R2
470E
RA1
J1
VCC
R5
470E
RC2
J2