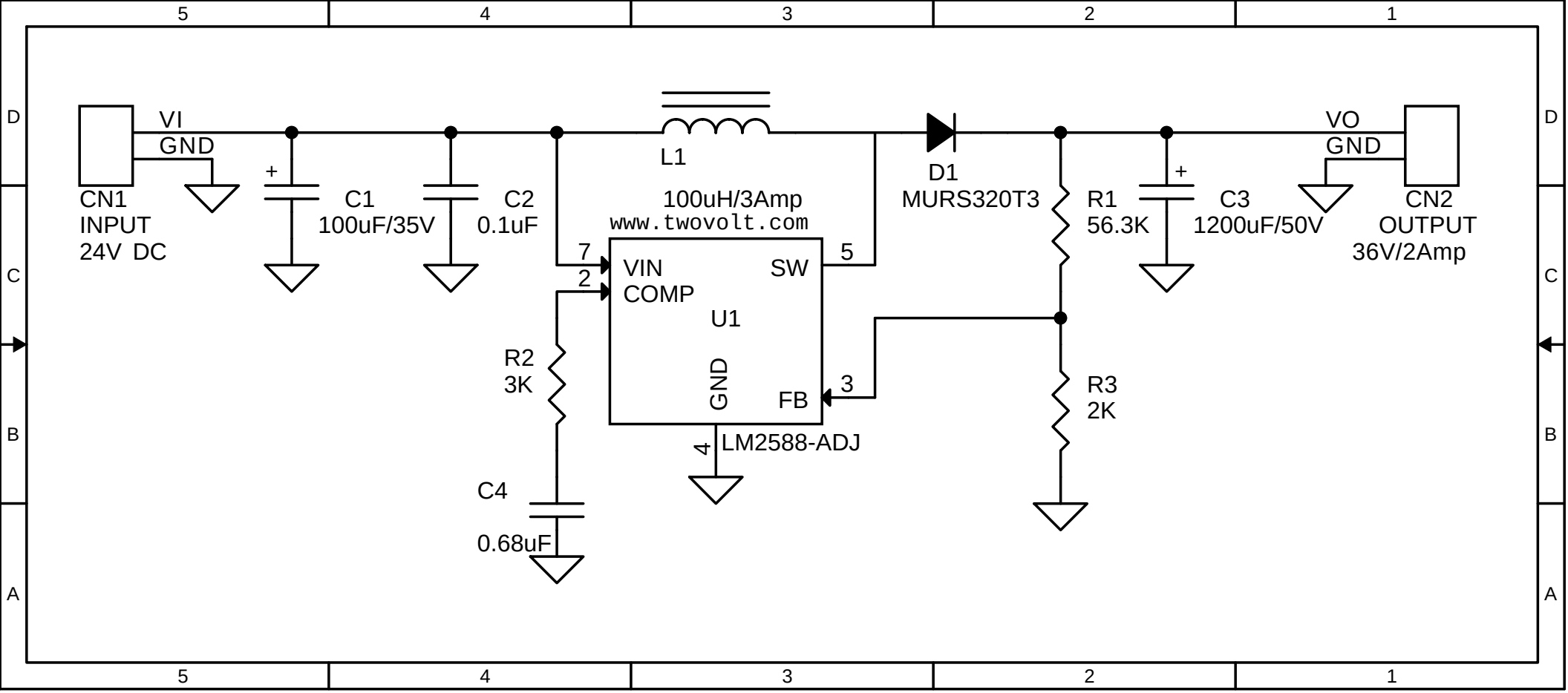
VI
GND
CN1
INPUT
24V DC
C1
100uF/35V
C2
0.1uF
L1
100uH/3Amp
www.twovolt.com
7
2
VIN
COMP
SW
5
U1
GND
FB
3
4
LM2588-ADJ
R2
3K
C4
0.68uF
D1
MURS320T3
R1
56.3K
R3
2K
C3
1200uF/50V
VO
GND
CN2
OUTPUT
36V/2Amp