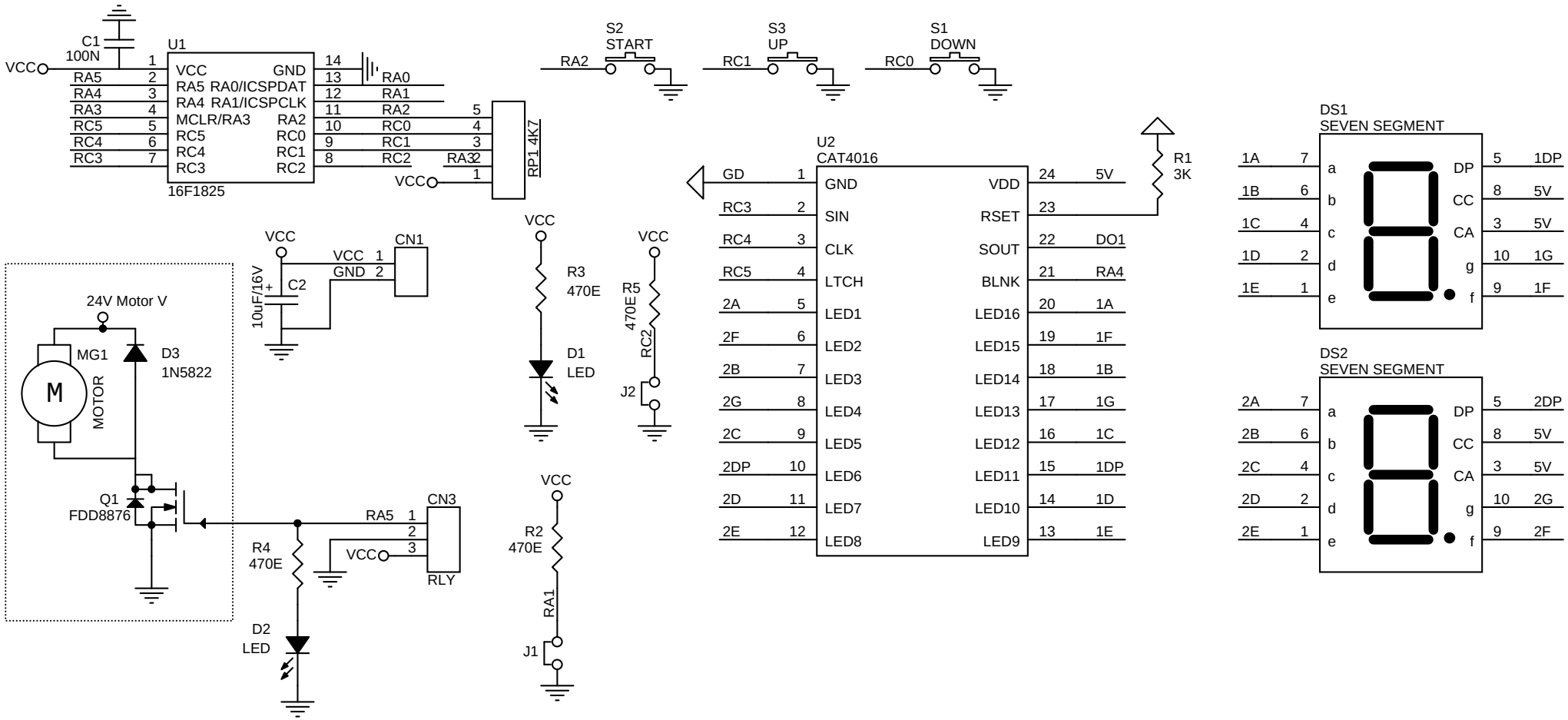
U1
16F1825
VCC
C1
100N
RA5
RA4
RA3
RC5
RC4
RC3
VCC
GND
RA5 RA0/ICSPDAT
RA4 RA1/ICSPCLK
MCLR/RA3
RA2
RC0
RC1
RC2
RA0
RA1
RA2
RC0
RC1
RC2
RA3
RP1 4K7
S2
START
S3
UP
S1
DOWN
U2
CAT4016
GD
RC3
RC4
RC5
2A
2F
2B
2G
2C
2DP
2D
2E
GND
SIN
CLK
LTCH
LED1
LED2
LED3
LED4
LED5
LED6
LED7
LED8
VDD
RSET
SOUT
BLNK
LED16
LED15
LED14
LED13
LED12
LED11
LED10
LED9
5V
DO1
RA4
1A
1F
1B
1G
1C
1DP
1D
1E
R1
3K
DS1
SEVEN SEGMENT
DS2
SEVEN SEGMENT
1A
1B
1C
1D
1E
2A
2B
2C
2D
2E
a
b
c
d
e
f
g
DP
CC
CA
1DP
5V
1G
1F
2DP
2G
2F
CN1
VCC
GND
C2
10uF/16V
24V Motor V
MG1
MOTOR
M
D3
1N5822
Q1
FDD8876
CN3
RLY
RA5
R4
470E
D2
LED
R3
470E
D1
LED
R5
470E
RC2
J2
R2
470E
RA1
J1