HIGH CURRENT UNIPOLAR STEPPER MOTOR CONTROLLER

High Current Unipolar Stepper Motor Controller project is based on chopper drive. Chopper drive allows for use of higher voltage power supply for better performance and higher speed. It uses SGS Thomson's L297 IC and TIP142 transistor.

- Logic supply : 5 VDC @ 300 mA
- Motor Supply : 8 to 30 VDC
- Connection via 10-pin Box Header for easy interface with any microcontroller development boards
- External or internal voltage reference option via jumper
- Onboard preset for current adjustment
- High speed switching diodes for transistor protection
- Power-On LED indicator for both the supplies
- Screw terminal connector for easy supplies and motor connection
- Heat sink included
- Four mounting holes 3.2 mm each
- PCB dimensions 110 mm x 53 mm

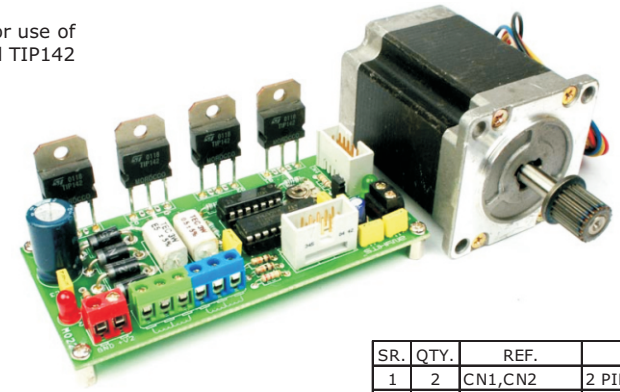

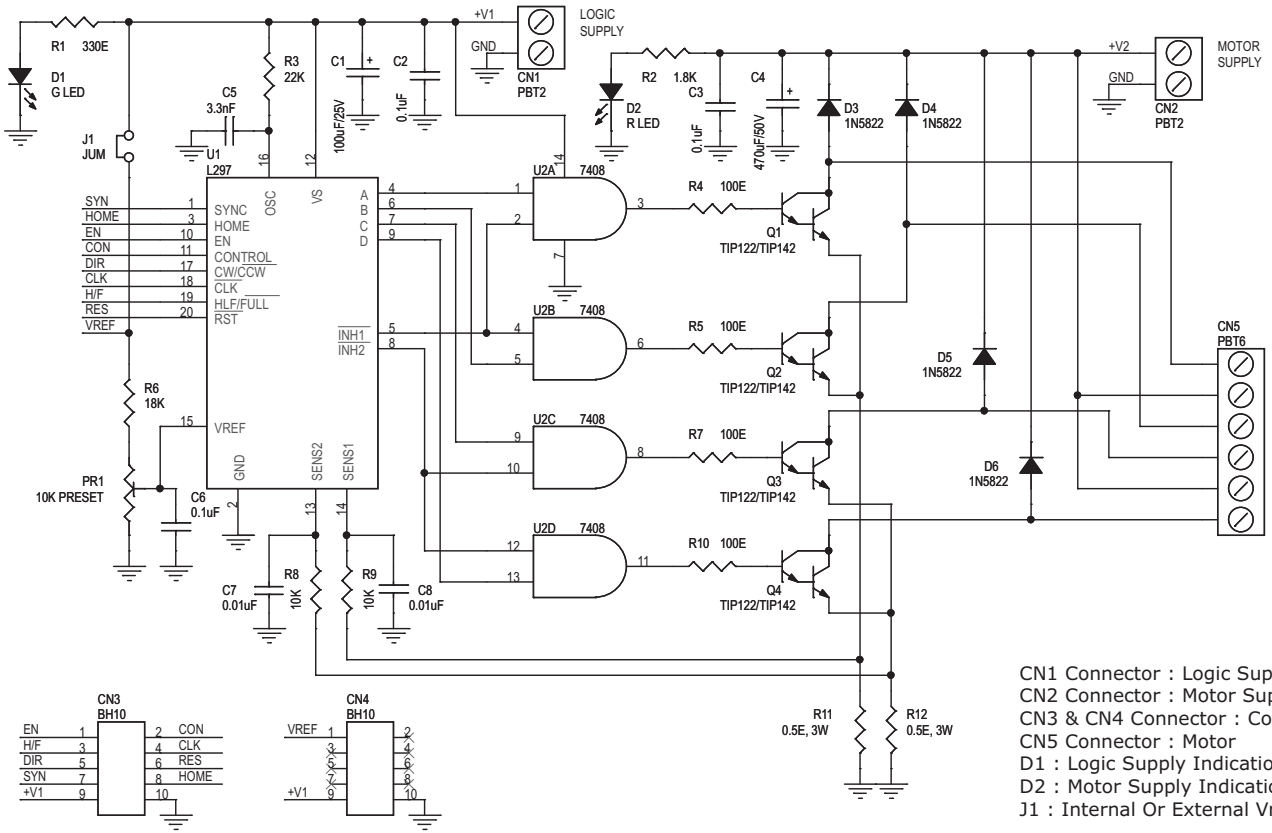

SR.	QTY.	REF.	DESCRIPTION
1	2	CN1,CN2	2 PIN SCREW TERMINAL CONNECTOR
2	2	CN3,CN4	10 PIN BOX HEADER CONNECTOR
3	1	CN5	6 PIN SCREW TERMINAL CONNECTOR
4	1	C1	100uF/25V
5	3	C2,C3,C6	0.1uF
6	1	C4	470uF/50V
7	1	C5	3.3nF
8	2	C7,C8	0.01uF
9	1	D1	GREEN LED
10	1	D2	RED LED
11	4	D3,D4,D5,D6	1N5822
12	1	J1	2 PIN JUMPER WITH CLOSER
13	1	PR1	10K PRESET
14	4	Q1,Q2,Q3,Q4	TIP142
15	1	R1	330E
16	1	R2	1.8K
17	1	R3	22K
18	4	R4,R5,R7,R10	100E
19	1	R6	18K
20	2	R8,R9	10K
21	2	R11,R12	0.5E, 3W
22	1	U1	L297
23	1	U2	7408
24	1	SOCKET	20 PIN DIP IC SOCKET
25	1	SOCKET	14 PIN DIP IC SOCKET
26	4	SCREW	SC02905
27	4	STUD	ST05008

CN1 Connector : Logic Supply
CN2 Connector : Motor Supply
CN3 & CN4 Connector : Control Signals
CN5 Connector : Motor
D1 : Logic Supply Indication
D2 : Motor Supply Indication
J1 : Internal Or External Vref select

twovolt INDIA Copyright © 2005

HIGH CURRENT UNIPOLAR STEPPER MOTOR CONTROLLER

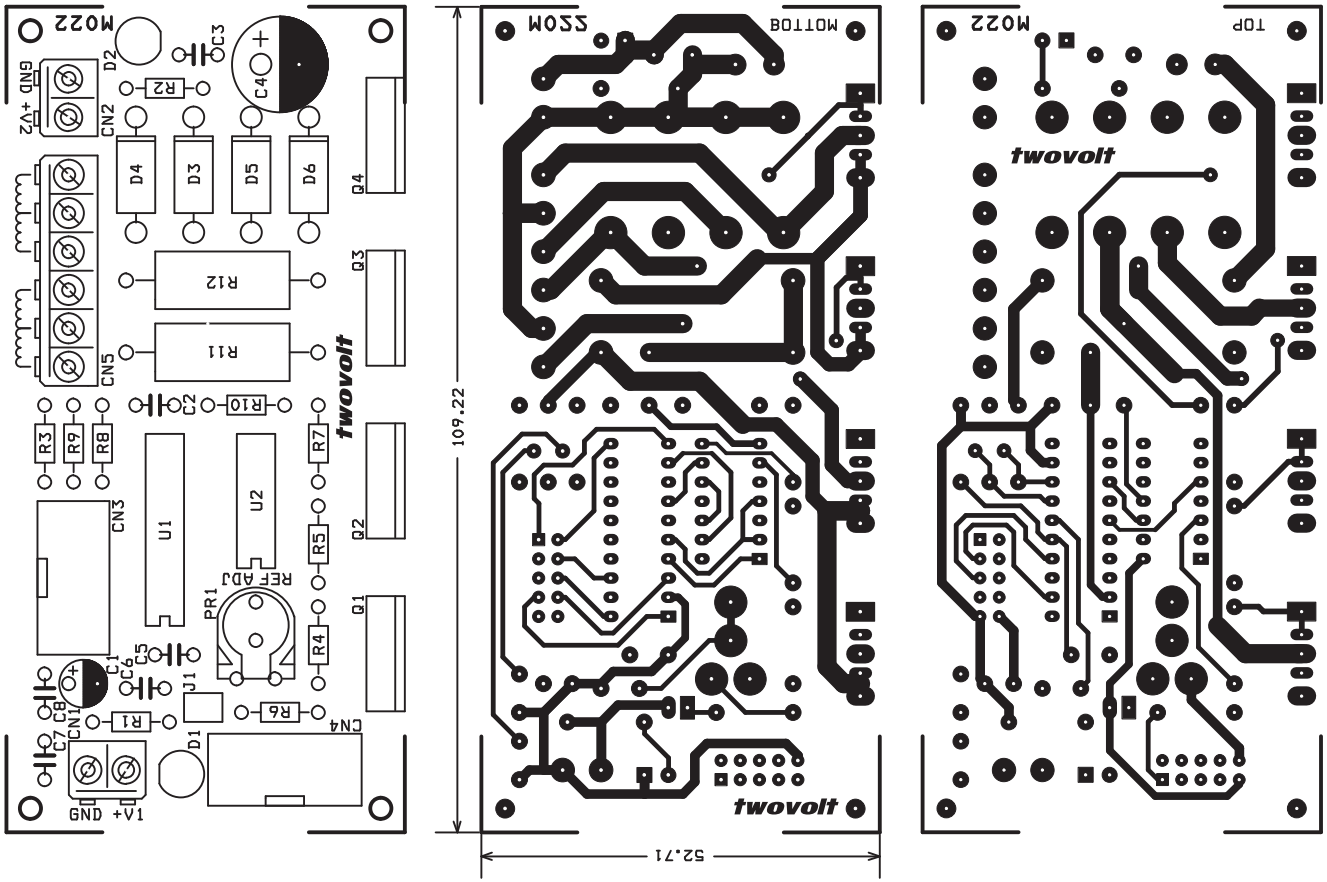

07005
twovolt INDIA Copyright © 2005