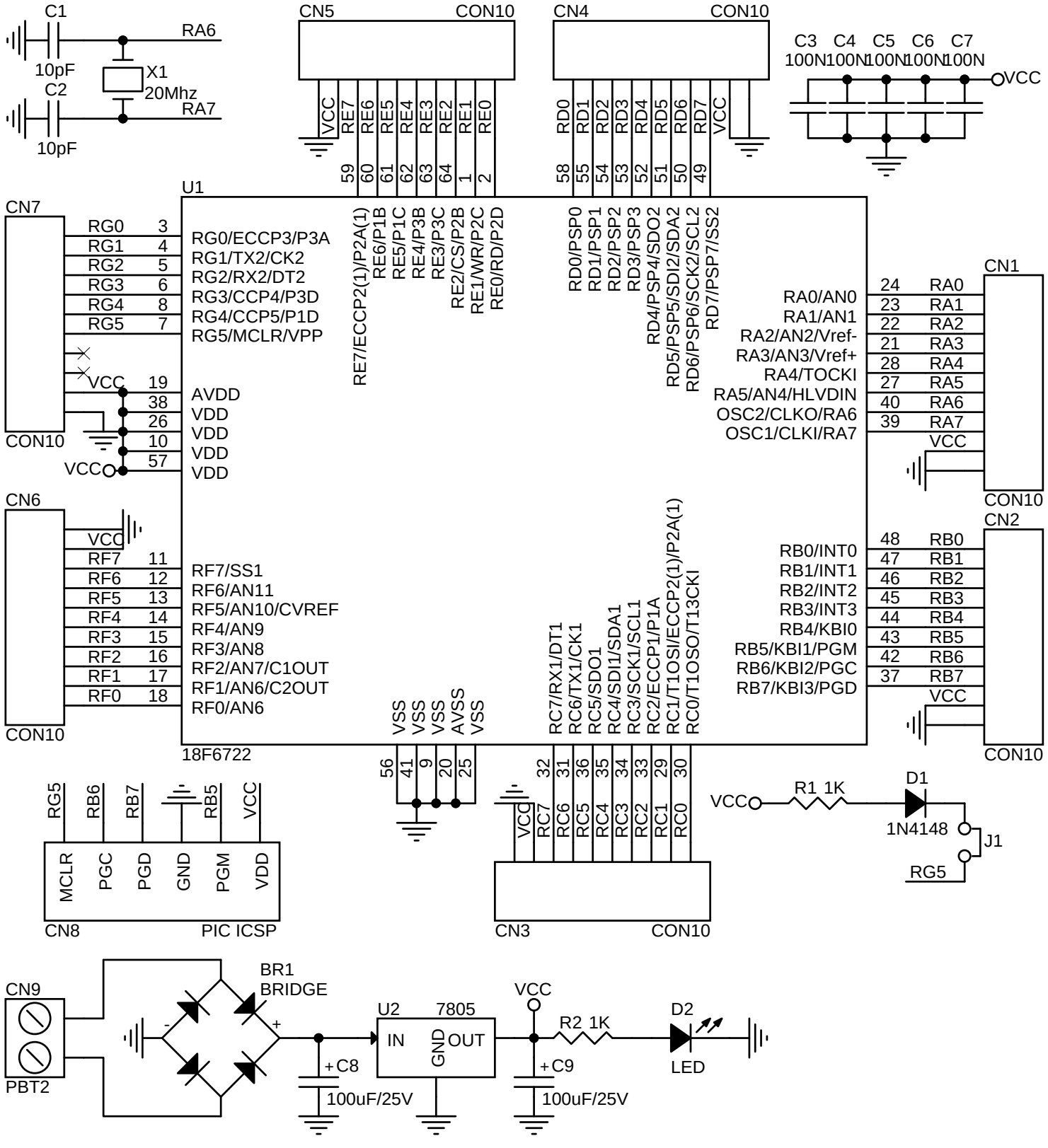
C1
10pF
C2
10pF
X1
20Mhz
RA6
RA7
CN5
CON10
CN4
CON10
C3 100N
C4 100N
C5 100N
C6 100N
C7 100N
VCC
U1
CN7
CON10
CN6
CON10
CN1
CON10
CN2
CON10
18F6722
RG0/ECCP3/P3A
RG1/TX2/CK2
RG2/RX2/DT2
RG3/CCP4/P3D
RG4/CCP5/P1D
RG5/MCLR/VPP
AVDD
VDD
RF7/SS1
RF6/AN11
RF5/AN10/CVREF
RF4/AN9
RF3/AN8
RF2/AN7/C1OUT
RF1/AN6/C2OUT
RF0/AN6
RE7/ECCP2(1)/P2A(1)
RE6/P1B
RE5/P1C
RE4/P3B
RE3/P3C
RE2/CS/P2B
RE1/WR/P2C
RE0/RD/P2D
RD0/PSP0
RD1/PSP1
RD2/PSP2
RD3/PSP3
RD4/PSP4/SDO2
RD5/PSP5/SDI2/SDA2
RD6/PSP6/SCK2/SCL2
RD7/PSP7/SS2
RA0/AN0
RA1/AN1
RA2/AN2/Vref-
RA3/AN3/Vref+
RA4/TOCKI
RA5/AN4/HLVDIN
OSC2/CLKO/RA6
OSC1/CLKI/RA7
RB0/INT0
RB1/INT1
RB2/INT2
RB3/INT3
RB4/KBI0
RB5/KBI1/PGM
RB6/KBI2/PGC
RB7/KBI3/PGD
VSS
AVSS
RC7/RX1/DT1
RC6/TX1/CK1
RC5/SDO1
RC4/SDI1/SDA1
RC3/SCK1/SCL1
RC2/ECCP1/P1A
RC1/T1OSI/ECCP2(1)/P2A(1)
RC0/T1OSO/T13CKI
R1 1K
D1
1N4148
J1
RG5
CN8
PIC ICSP
MCLR
PGC
PGD
GND
PGM
VDD
CN3
CON10
CN9
PBT2
BR1
BRIDGE
C8
100uF/25V
U2
7805
IN
GND
OUT
C9
100uF/25V
R2 1K
D2
LED