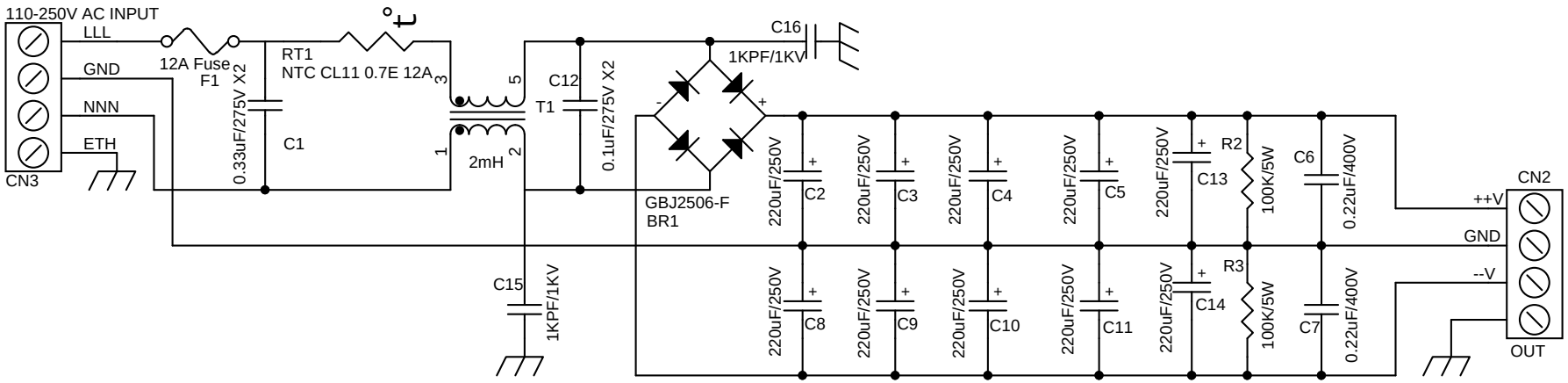
110-250V AC INPUT
LLL
GND
NNN
ETH
CN3
12A Fuse
F1
0.33uF/275V X2
C1
RT1
NTC CL11 0.7E 12A
2mH
T1
C12
0.1uF/275V X2
C16
1KPF/1KV
GBJ2506-F
BR1
C15
1KPF/1KV
220uF/250V
C2
C3
C4
C5
C8
C9
C10
C11
C13
C14
R2
R3
100K/5W
C6
C7
0.22uF/400V
CN2
++V
GND
--V
OUT

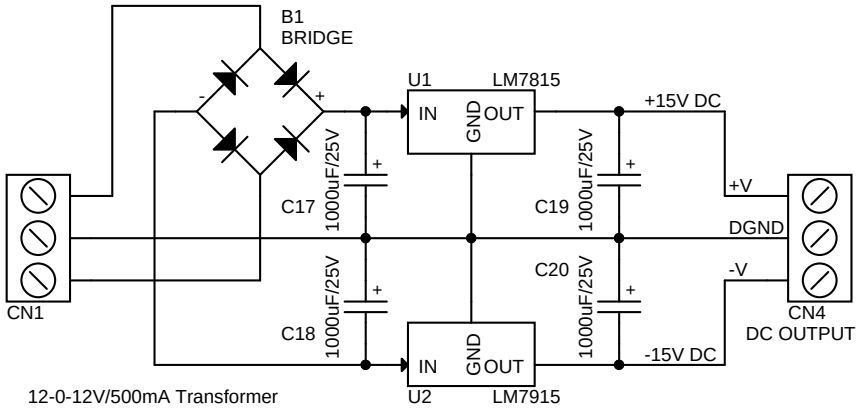
B1
BRIDGE
U1
LM7815
IN
GND
OUT
+15V DC
C17
1000uF/25V
C19
1000uF/25V
+V
DGND
-V
C20
C18
CN1
CN4
DC OUTPUT
-15V DC
U2
LM7915
12-0-12V/500mA Transformer

OPTIONAL