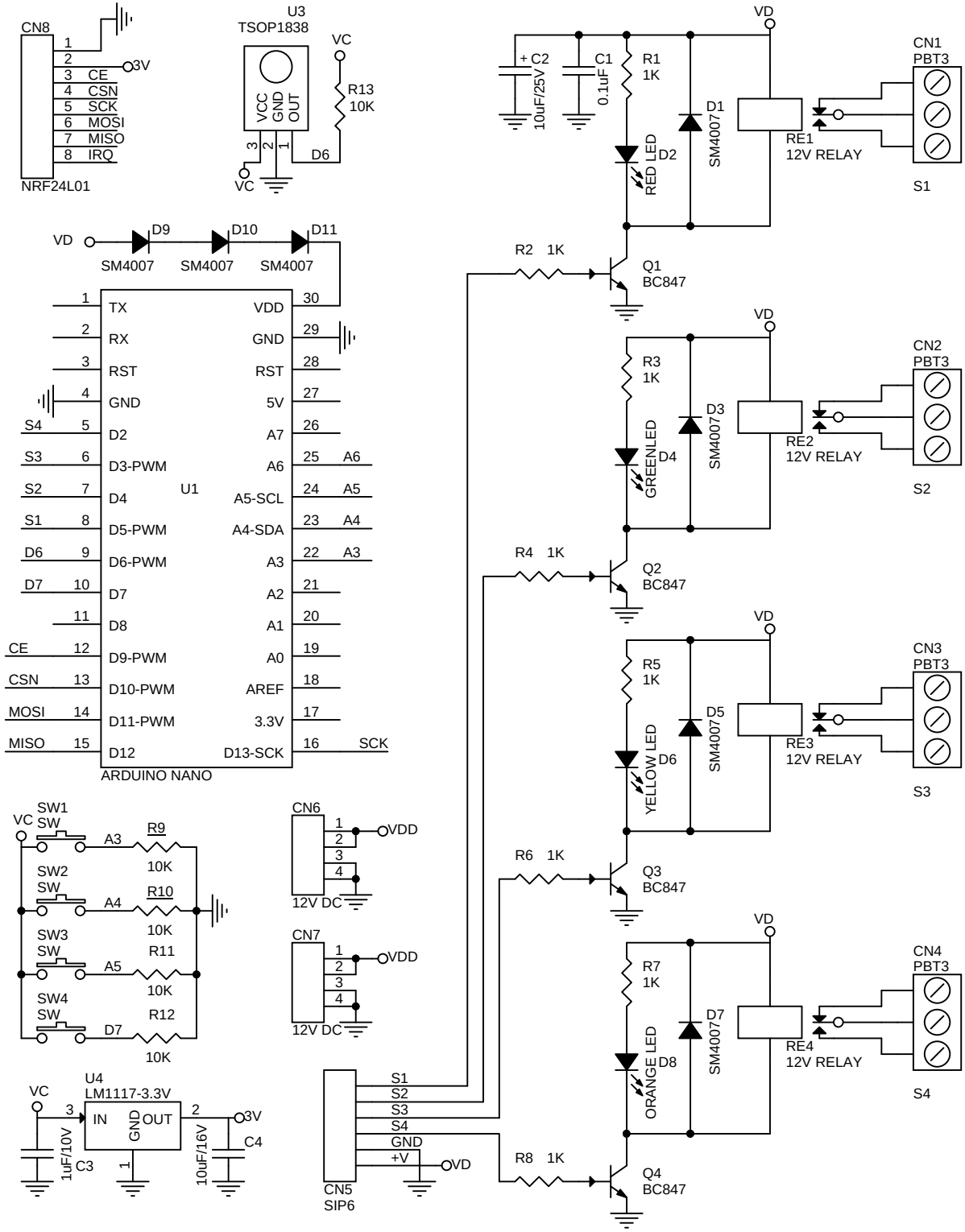
CN8
NRF24L01
3V
CE
CSN
SCK
MOSI
MISO
IRQ
U3
TSOP1838
VCC
GND
OUT
VC
R13
10K
D6
D9
D10
D11
SM4007
U1
ARDUINO NANO
TX
RX
RST
GND
D2
D3-PWM
D4
D5-PWM
D6-PWM
D7
D8
D9-PWM
D10-PWM
D11-PWM
D12
VDD
5V
A7
A6
A5-SCL
A4-SDA
A3
A2
A1
A0
AREF
3.3V
D13-SCK
SW1
SW2
SW3
SW4
R9
R10
R11
R12
10K
CN6
CN7
VDD
12V DC
U4
LM1117-3.3V
IN
OUT
C3
1uF/10V
C4
10uF/16V
CN5
SIP6
S1
S2
S3
S4
GND
+V
C2
10uF/25V
C1
0.1uF
R1
1K
D1
D2
RED LED
RE1
12V RELAY
CN1
PBT3
Q1
BC847
R2
R3
D3
D4
GREENLED
RE2
CN2
Q2
R4
R5
D5
D6
YELLOW LED
RE3
CN3
Q3
R6
R7
D7
D8
ORANGE LED
RE4
CN4
Q4
R8